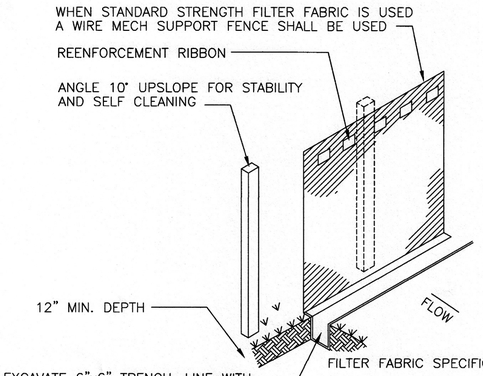

FILTER FABRIC SPECIFICATIONS (HD)

A) 75% MIN. FILTERING EFFICIENCY
B) TENSILE STRENGTH AT 20% ELONGATION= 50 LBS, LIN.IN (MIN.)
C) FLOW RATE = 40 GAL/SQ.FT. MINUTE (MIN)

SILT FENCE DETAIL

N.T.S.

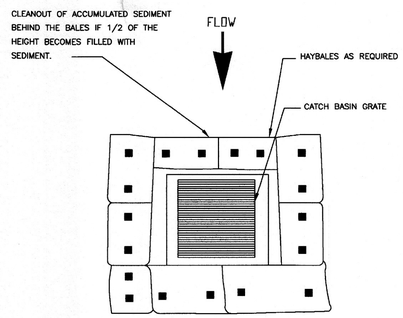

HAY BALE BARRIER

N.T.S.

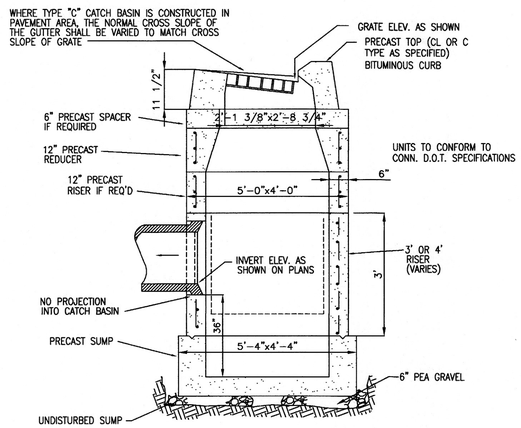

PRECAST CATCH BASIN DETAIL

N.T.S.

GENERAL NOTES

FLYNN & CYR LAND SURVEYING LLC DATED SEPT 3, 2019

EROSION AND SEDIMENTATION CONTROL NOTES

1. PROPERTY LINE DIMENSIONS AND BEARINGS TAKEN FROM A-2 SURVEY PREPARED BY FLYNN & CYR LAND SURVEYING LLC DATED SEPT 3, 2019
2. EXISTING GRADE CONTOURS TAKEN FROM ABOVE TOPOGRAPHIC SURVEY
3. THIS PLAN DEPICTS INFORMATION FOR SITE DEVELOPMENT REVIEW AND APPROVAL ONLY. FURTHER ADDITIONAL INFORMATION MAY BE REQUIRED FOR CONSTRUCTION.

EROSION AND SEDIMENTATION CONTROL NOTES

SCHEDULE

1. THE EARTH MOVING SHALL START AS SOON AS APPROVALS ARE GRANTED, FINAL GRADING AND STABILIZATION WILL BE COMPLETED BY WINTER 2021

GENERAL NOTES

2. PRIOR TO EXCAVATION FOR ANY REASON "CALL BEFORE YOU DIG" SHALL BE NOTIFIED. IF ANY UTILITY INTERFERENCE IS ENCOUNTERED, THE ENGINEER SHALL BE NOTIFIED.
3. THE CONTRACTOR SHALL VERIFY ALL THE LOCATIONS, ELEVATIONS, PROPERTY LINES, AND SITE CONDITIONS IN THE FIELD PRIOR TO CONSTRUCTION. ANY DISCREPANCY WITH THE DESIGN AND FIELD CONDITIONS SHALL BE BROUGHT TO THE ATTENTION OF THE ENGINEER.
4. THIS PLAN IS INTENDED TO DEPICT THE "SITE DEVELOPMENT PLAN" ONLY.
5. THE CONNECTICUT GUIDELINES FOR SOIL EROSION AND SEDIMENT CONTROL PREPARED BY THE CONNECTICUT COUNCIL ON SOIL AND WATER CONSERVATION, DATED 2002 AND AS AMENDED, SHALL BE FOLLOWED. ALL EROSION AND SEDIMENT CONTROLS SHALL BE LEFT IN PLACE UNTIL STABILIZATION HAS BEEN ACHIEVED.
6. ALL APPLICABLE TOWN OFFICIALS SHALL BE NOTIFIED A MINIMUM OF 48 HOURS PRIOR TO THE START OF CONSTRUCTION.
7. ALL EROSION AND SEDIMENT CONTROLS REQUIRED BY THE TOWN OR SITE ENGINEER MUST BE IN PLACE WITHIN 48 HOURS AFTER NOTIFICATION.
8. ALL EXPOSED SOIL SURFACES AND TRAVELED ROADWAYS SHOULD BE MOISTENED PERIODICALLY WITH ADEQUATE WATER TO CONTROL DUST.
9. THE OWNER / CONTRACTOR MUST OBTAIN ALL NECESSARY PERMITS, RIGHTS TO DRAIN, SLOPE RIGHTS AND / OR EASEMENTS WHICH MAY BE REQUIRED.
10. LAND DISTURBANCE SHALL BE KEPT TO A MINIMUM. RESTABILIZATION WILL BE SCHEDULED AS SOON AS IS PRACTICAL.
11. HAY BALE FILTERS OR SILT FENCE SHALL BE INSTALLED ALONG THE TOE OF ALL CRITICAL CUT AND FILL SLOPES.
12. EROSION AND SEDIMENT CONTROL MEASURES SHALL BE INSTALLED PRIOR TO CONSTRUCTION WHENEVER POSSIBLE.
13. ALL CONTROL MEASURES SHALL BE INSPECTED AND MAINTAINED IN EFFECTIVE CONDITION THROUGHOUT THE CONSTRUCTION PERIOD.
14. ADDITIONAL CONTROL MEASURES SHALL BE INSTALLED DURING CONSTRUCTION IF NECESSARY OR REQUESTED.
15. SEDIMENT REMOVED FROM CONTROL STRUCTURES SHALL BE DISPOSED OF IN A MANNER WHICH IS CONSISTENT WITH THE INTENT OF THIS PLAN.
16. FOR FURTHER INFORMATION REFER TO DRAWING NO. 00105-SP2-R6 & 00105-SU-R7
17. RIDGEFIELD MOTOR INN INC. IS ASSIGNED THE RESPONSIBILITY FOR IMPLEMENTING THE EROSION AND SEDIMENTATION CONTROL PLAN. THIS RESPONSIBILITY INCLUDES THE INSTALLATION AND MAINTENANCE OF CONTROL MEASURES, INFORMING ALL PARTIES ENGAGED ON THE CONSTRUCTION SITE OF THE REQUIREMENTS AND OBJECTIVES OF THE PLAN, NOTIFYING THE PLANNING, ZONING, AND / OR WETLANDS OFFICE OF ANY TRANSFER OF THIS RESPONSIBILITY, AND FOR CONVEYING A COPY OF THE EROSION AND SEDIMENT CONTROL PLAN IF THE TITLE TO LAND IS TRANSFERRED.

ORDER OF CONSTRUCTION

1. INSTALLATION OF THE FILTER FABRIC AND/OR STAKED HAY BALES AS SHOWN ON THE PLAN.
2. INSTALLATION OF THE DRAINAGE
   EXCAVATION AND GRADING FOR DRIVEWAY / PARKING AND BUILDING
3. INSTALLATION OF THE GRAVEL, CURBS AND WALKS.
4. BACKFILL AND STABILIZE WITH TOPSOIL IN LAWN AREAS OR PROCESSED TRAP ROCK IN ROADWAY/DRIVEWAY AREAS.
5. PAVE WHERE APPLICABLE.
6. SEED ALL DISTURBED AREAS. ALL SEEDING SHALL BE FERTILIZED AT 7.5 LBS/1000 SQ.FT. USING 10-10-10 OR EQUIVALENT. GROUND LIMESTONE SHALL BE USED AT A RATE OF 135 LBS./1,000 SQ.FT. RECOMMENDED SEEDING DATES SHALL BE APRIL 1 THROUGH JUNE 1 AND AUGUST 15 THROUGH SEPTEMBER 1. SEED MIX SHALL BE CANARY GRASS (.45 LBS./1,000 SQ.FT.) HYDROSEEDING IS A RECOMMENDED ALTERNATIVE TO HAND APPLICATION.
7. LANDSCAPE AS PER LANDSCAPING PLAN.

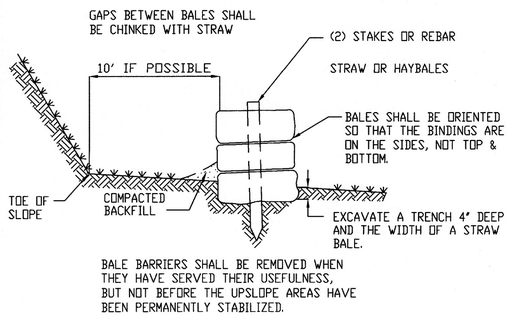

HAYBALE BARRIER

N.T.S.

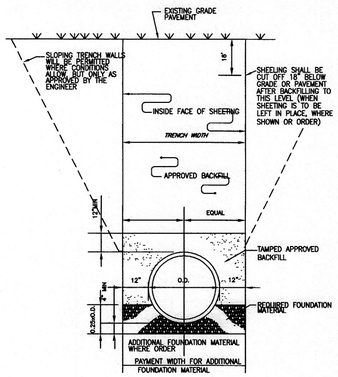

TRENCH IN EARTH DETAIL

N.T.S.

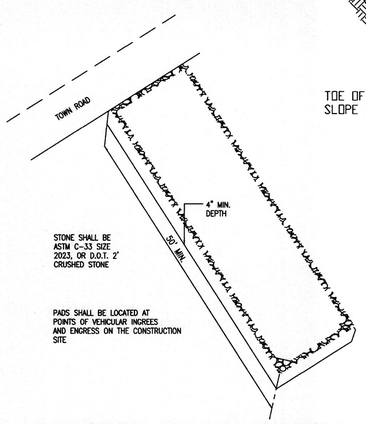

CONSTRUCTION STABILIZING PAD

N.T.S.

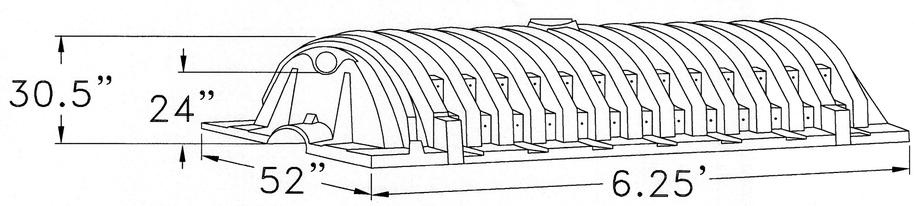

STORMWATER MANAGEMENT GALLERY (TYP)

N.T.S.

CONTACTOR 330 (HD)

(PROVIDE 12" OF 3/4" CRUSHED STONE SUROUNDING THE GALLERY)

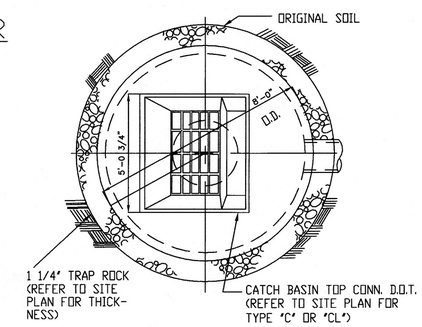

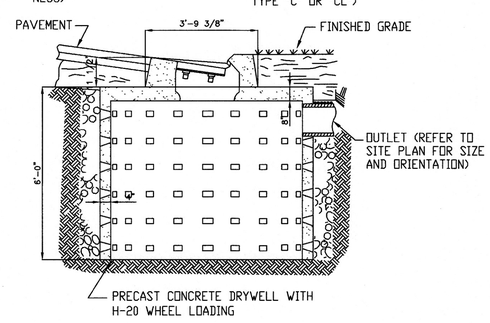

STORMWATER MANAGEMENT DRYWELL (TYP)

N.T.S.

N°	REVISION	DATE	BY

R.J. GALLAGHER JR. & ASSOCIATES
CIVIL ENGINEERS
39 MILL PLAIN ROAD DANBURY, CONNECTICUT (203) 798-9640

PROJECT: 296 ETHAN ALLEN HIGHWAY
REDDING, CONNECTICUT
prepared for RIDGEFIELD MOTOR INN INC.

TITLE: DETAIL SHEET

DRAWN BY: T.K.	SCALE: 1"=20' OR AS NOTED	DRAWING N° 15062-D
APPROVED BY: R.J.G. JR.	DATE: 9/15/20	SHEET 3 OF 5